28-33
TRACTOR-TOWED SCRAPER

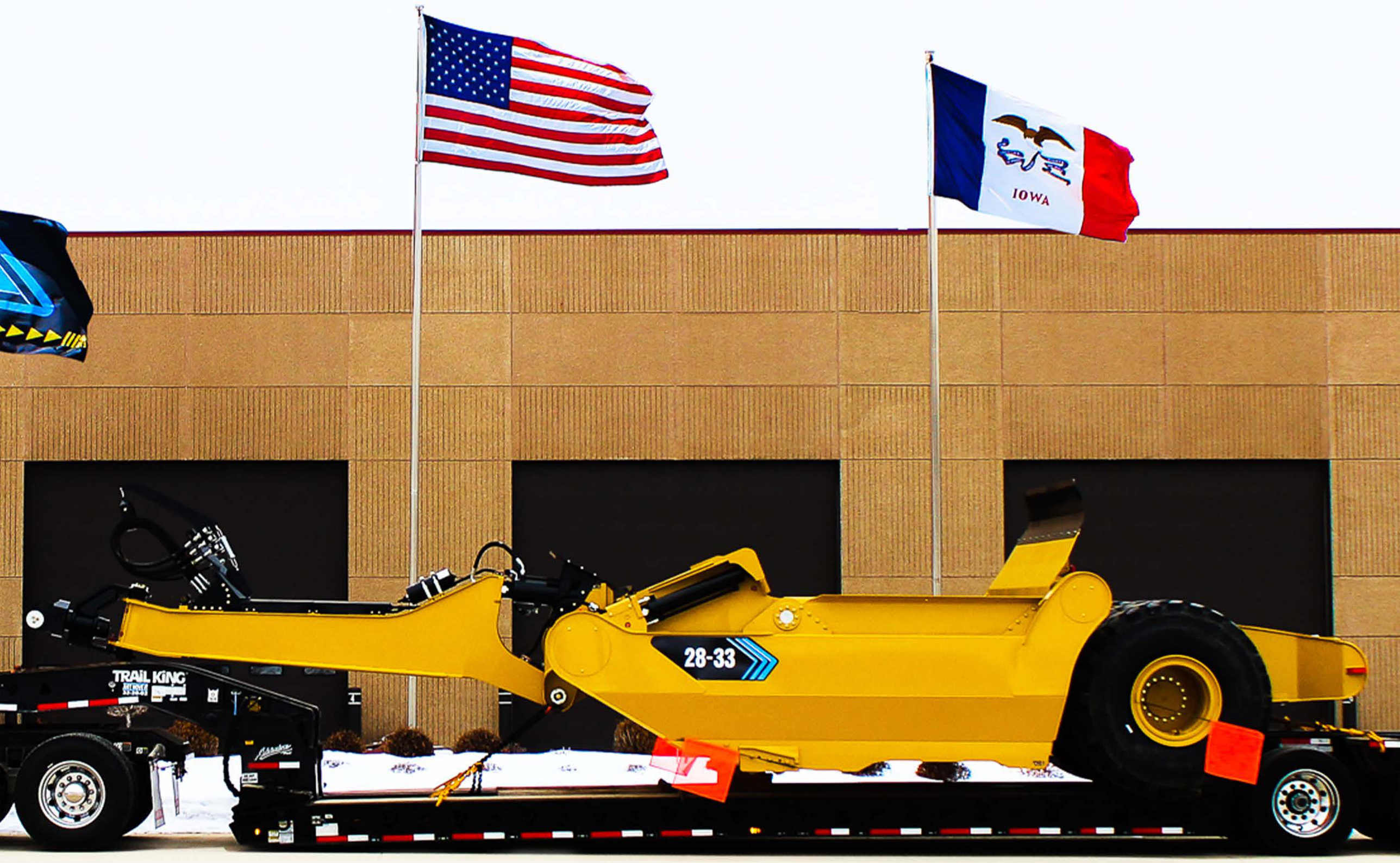

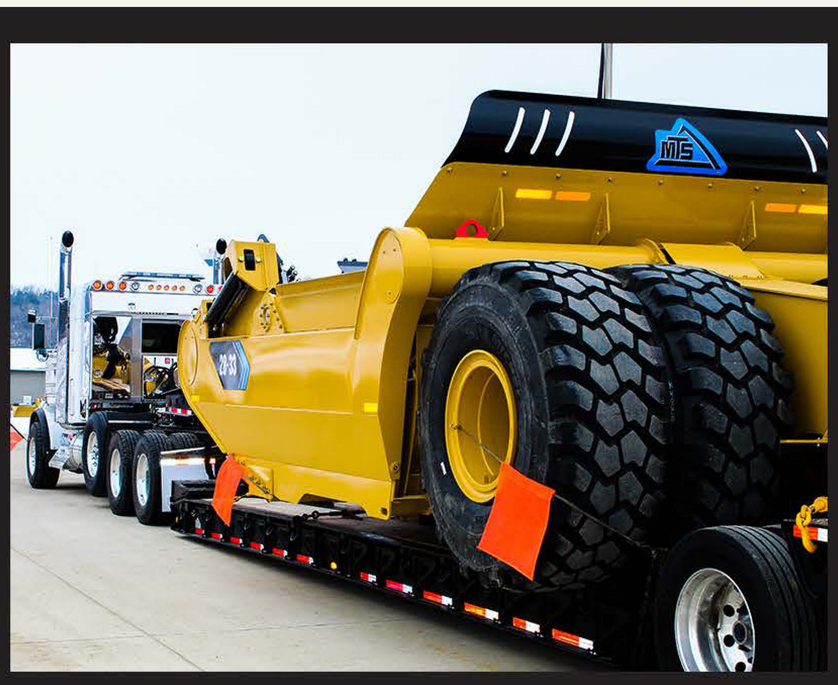

MOBILE TRACK SOLUTIONS

TRACK FORWARD

A young company with a long history.

mobiletracksolutions.com

Elkader, IA
(563) 245-6871

28-33 SPECIFICATIONS

	SCRAPER BOWL		
	ISO Capacity	28.9 y^3	22.1 m^3
	ISO Capacity - Sideracks & Apron SG	33 y^3	25.2 m^3
	ISO Capacity - Sideracks	31.8 y^3	24.3 m^3
	Width of Cut, To Router Bits	147.5 in	3,747 mm
	Capacity Struck - Sideracks & Apron SG	17.3 y^3	15.8 m^3
	Capacity Struck	16.0 y^3	12.2 m^3
	Max Depth of Cut	7.125 in	181 mm
	Ground Clearance @ CE	27 in	686 mm
	Apron Opening	76 in	1,930 mm

	DIMENSIONS		
	Width (Inside of Bowl)	144 in	3,656 mm
1	Width (Outside Rear Tires)	144 in	3,656 mm
2	Width (Outside Bowl)	156 in	3,962 mm
	Height (Floor to top of Ejector)	75 in	1,905 mm
	Height (Sidewall)	41 in	1,041 mm
	Length (Floor)	72 in	1,829 mm
5	Push Block to Axle	45 in	1,143 mm
6	Axle to Cutting Edge	143 in	3,630 mm
7	Cutting Edge to Hitch	257 in	6,528 mm
	Maximum Load Rating	99,000 lbs	36,000 kg

	SHIPPING MODIFICATIONS		
3	Height (Overall Shipping)	106 in	2,692 mm
2	Width (Overall Shipping)	163.5 in	4,153 mm
4	Length (Overall Shipping)	482 in	12,243 mm
	Empty Weight	34,500 lbs.	15,649 kg

BRAKES & TIRES		
Brake Type	Dry Disk	
Caliper Quantity	4	
Operating Pressure of Brakes	500psi	3,447 kPa
Tire Quantity	4	
Standard Tires	26.5R25	
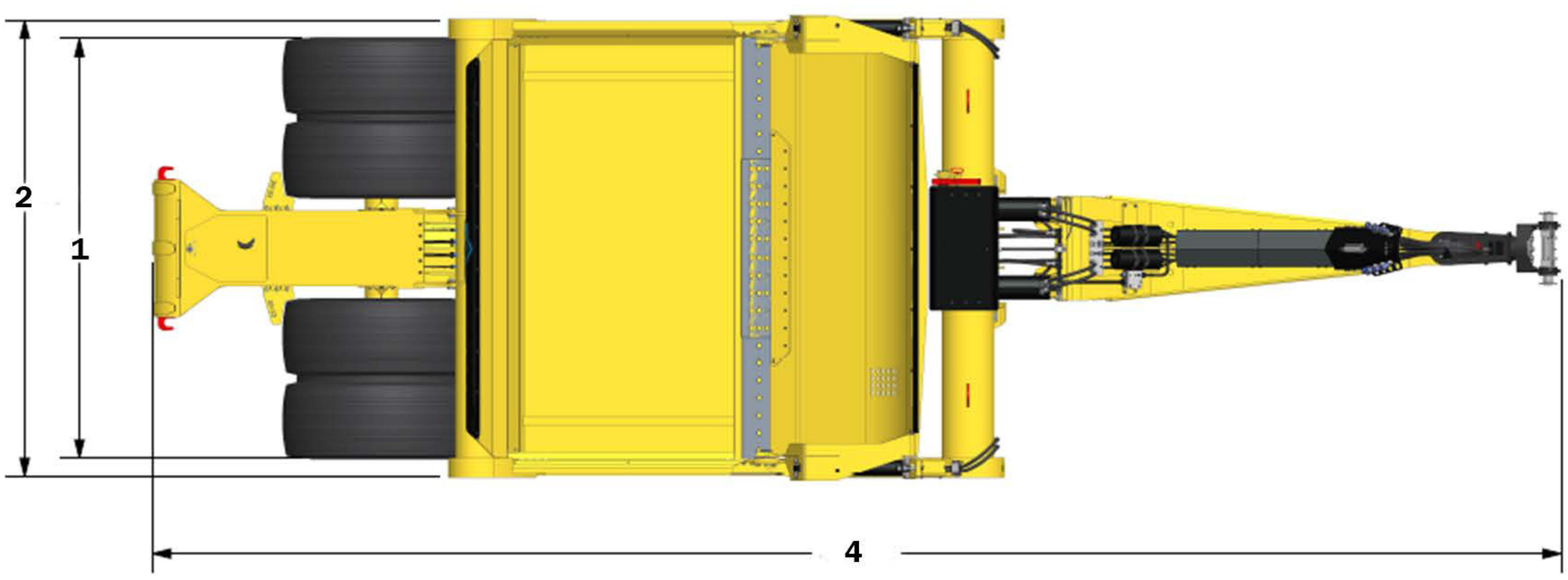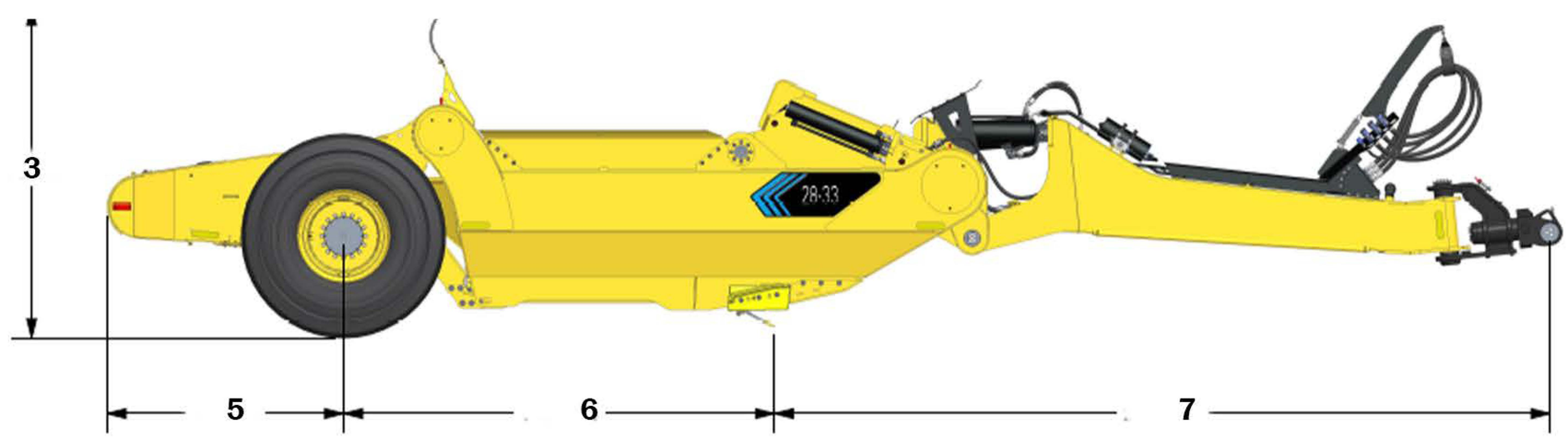
HYDRAULICS		
Bowl Cylinder Bore	7 in	178 mm
Bowl Cylinder Stroke	17 in	432 mm
Apron Cylinder Bore	4.5 in	114 mm
Apron Cylinder Stroke	25.45 in	646 mm
Ejector Cylinder Bore	6 in	152 mm
Ejector Cylinder Stroke	76 in	1,930 mm